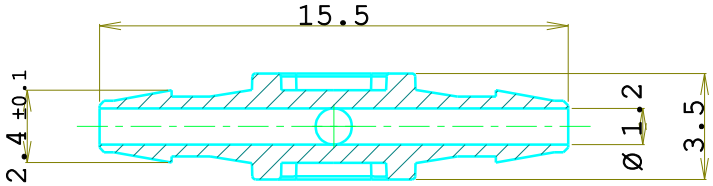

Sez. A-A

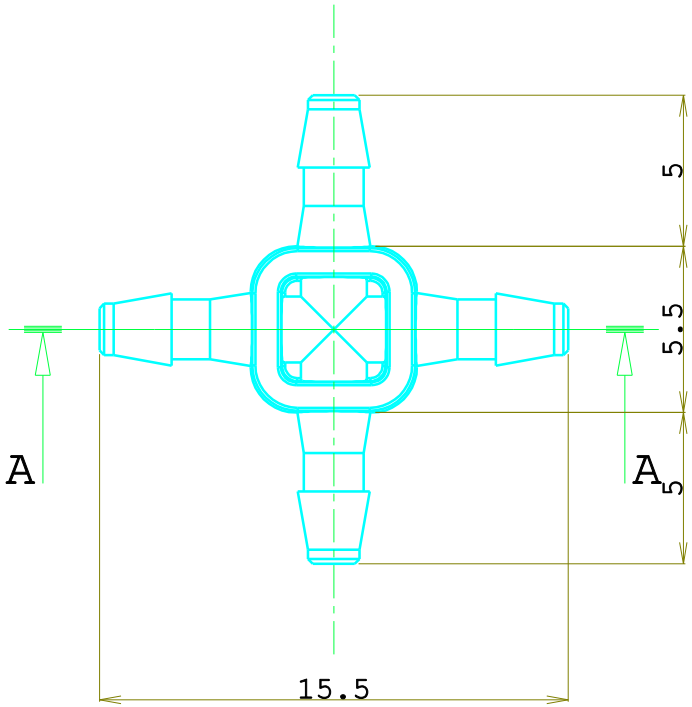

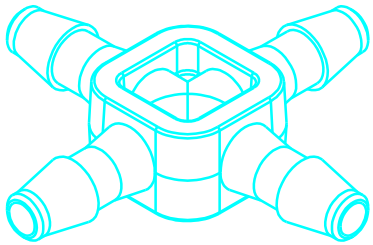

0.2 BURRS ALLOWED

3			
2			
1	Updated title block	Coccaglio	22/05/2026
	Changes	Signature	Date

CARRO LUIGI srl
MOLDS AND PLASTIC COMPONENTS

Via Lavoro e industria
25030 Rudiano (BS)

M0803.04 rev.01 del 02/02/2024

General tolerances	ISO 2768-mk
0.5 < x ≤ 6	± 0.1
6 < x ≤ 30	± 0.2
30 < x ≤ 120	± 0.3
120 < x ≤ 400	± 0.5

Mould Denomination

N°Cavities

Order

Member Denomination
CROSS CONNECTOR BARBED Ø1.6

Costumer code
ST561_16

Date	Molding Material	C.tion	Machine	Mould Weight
11/12/2025	PA6	---	----------	----------

Drawn By	Approved By	Eyebolts	Mould Dimensions
G.Coccaglio	Direzione C.A.	----------	----------

Costumer part

N°Par.	N°Pez.	Dimensions	Material	Treatment	Scale
-----	----	----------	----------	----------	4:1

A4 Sheet 1/1

This drawing is property of Carro Luigi srl who will safeguard its rights according to te civil and penal prevision of the law