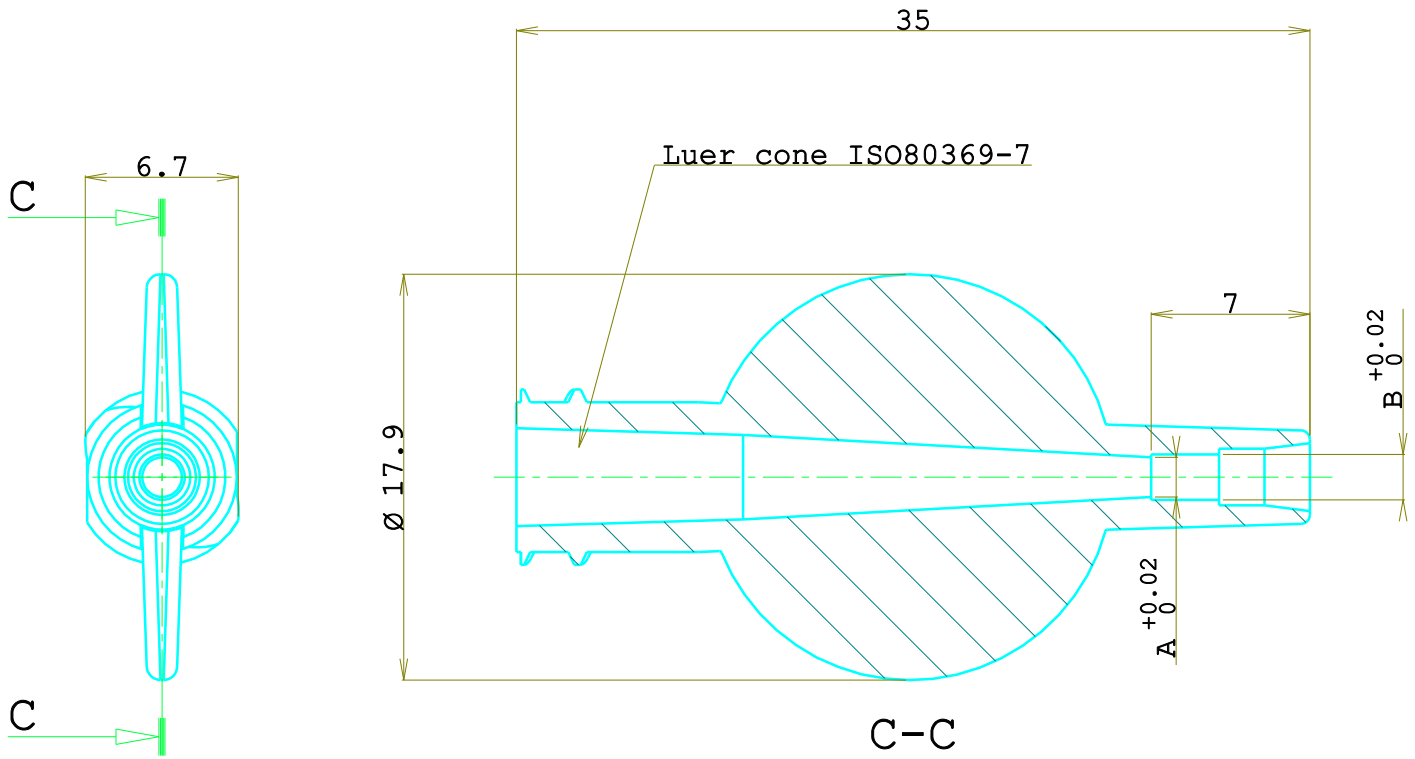

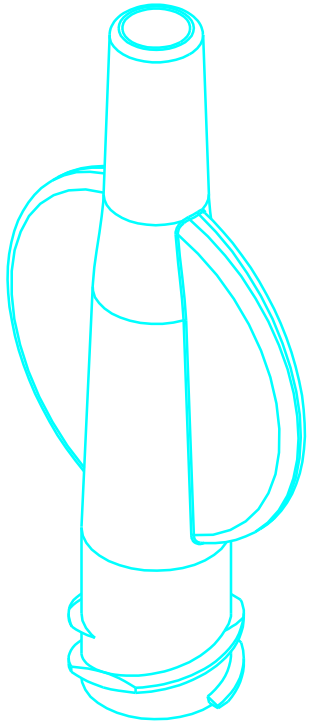

CODE	GAUGE	ØA	ØB
CONMO14	14G	2.00	1.70
CONMO15	15G	1.80	1.50
CONMO16	16G	1.60	1.30

0.2 BURRS ALLOWED

3			Updated title block	Changes
2				
1		Coccaglio	Signature	
		20/05/2026	Date	

CARRO LUIGI srl
MOLDS AND PLASTIC COMPONENTS

Via Lavoro e industria
25030 Rudiano (BS)

M0803.04 rev.01 del 02/02/2024

General tolerances	ISO 2768-mk
0.5 < x ≤ 6	± 0.1
6 < x ≤ 30	± 0.2
30 < x ≤ 120	± 0.3
120 < x ≤ 400	± 0.5

Mould Denomination: ----------

N°Cavities: ----

Order: ---

Costumer code: ---

Costumer part: ----

Member Denomination: CONETTO MOON XXG

Date	Molding Material	C.tion	Machine	Mould Weight
02/04/2025	PC	--------	----------	----------

Drawn By	Approved By	Eyebolts	Mould Dimensions
Lanza A.	Direzione C.A.	----------	----------

N°Par.	N°Pez.	Dimensions	Material	Treatment	Scale
-----	----	----------	----------	----------	3:1

A4 Sheet 1/1

This drawing is property of Carro Luigi srl who will safeguard its rights according to te civil and penal prevision of the law